Published: 11-May-2011

Body Repairs - Vehicle Specific Information and Tolerance Checks - Body and Frame

Description and Operation

Body Repairs - Tolerance Checks

Measurements shown are in millimetres and inches. The measurements shown in brackets are in inches.

Point-to-Point Dimensional Information

Point-to-point measurements are actual distances between two points. These points can be holes or intersections points. Where holes are taken, the point of measurement is always from the hole centres.

Front end dimensions

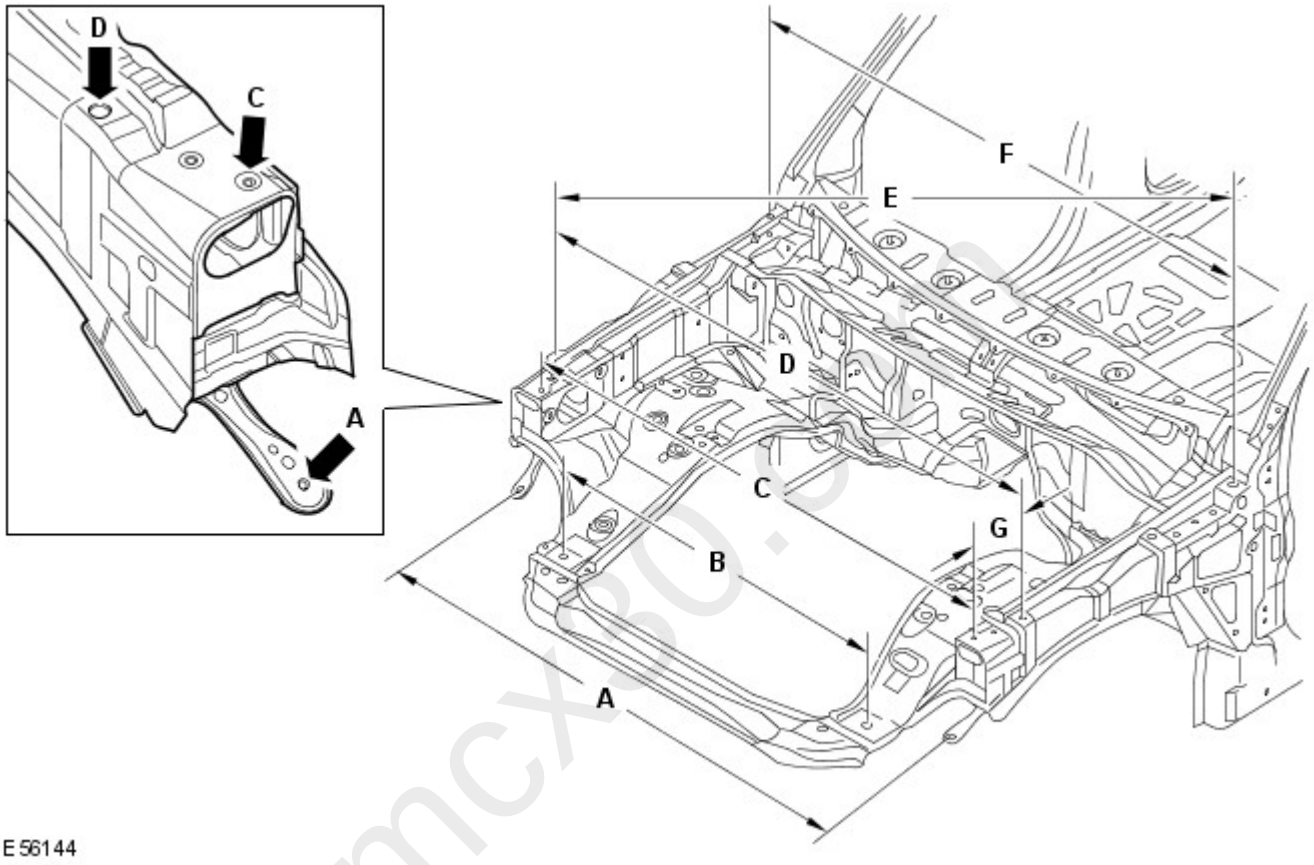

Item	From	To	Length
A	Hood latch panel, lower LH outer fixing	Hood latch panel, lower RH outer fixing	1503.2 (59.18)
B	Hood latch panel, LH locator slot	Hood latch panel, RH locator slot	900 (35.43)
C	Hood latch panel, LH locator dowel	Hood latch panel, RH locator dowels	1540.4 (60.64)
D	Fender, front LH fixing	Fender, front RH fixing	1617.8 (63.69)
E	Fender, front RH fixing	Fender, rear LH fixing	1780.2 (70.08)
F	Fender, rear LH fixing	Fender, rear RH fixing	1620 (63.77)
G	Fender, front fixing	Hood latch panel, locator dowel	114.23 (4.49)

Front end dimensions

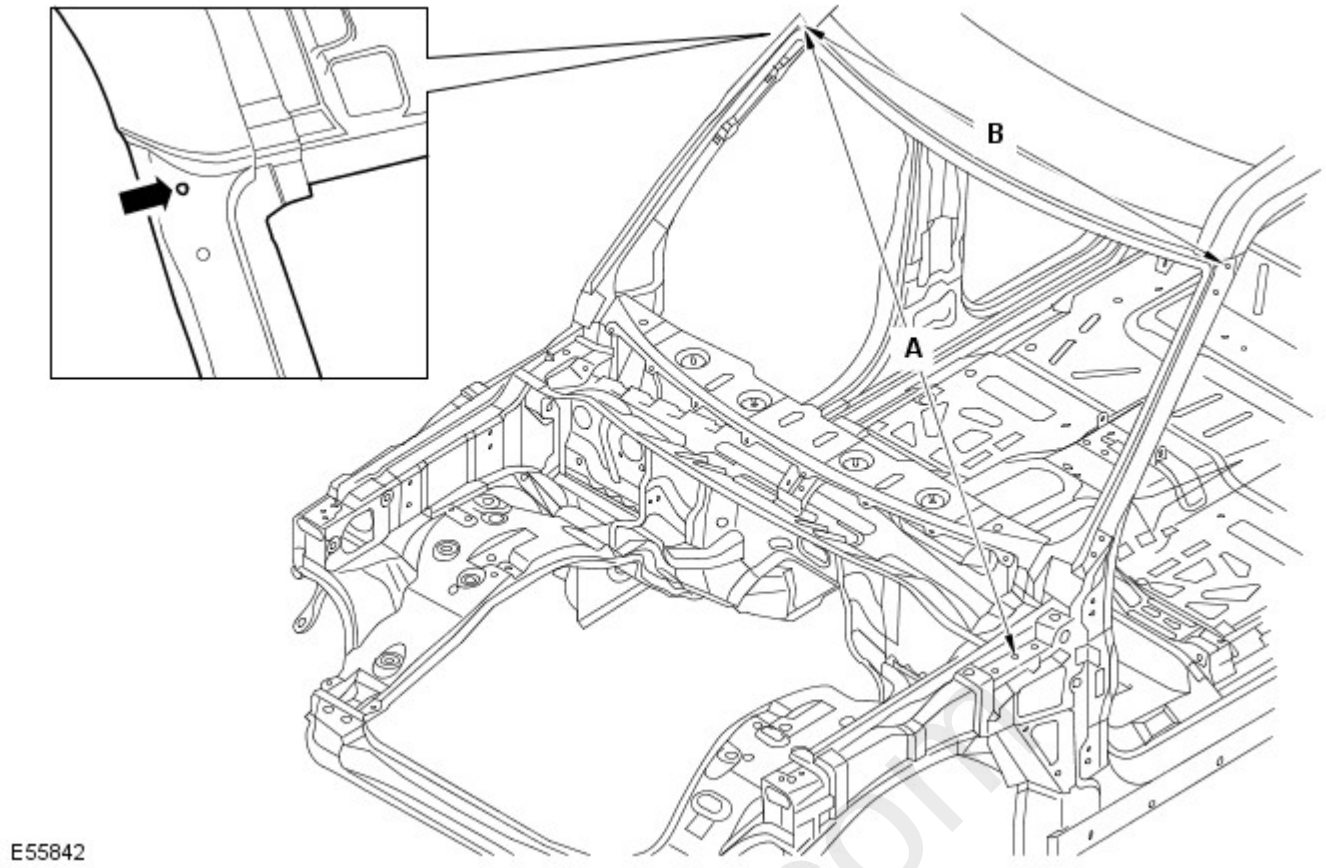

Item	From	To	Length
A	LH hood hinge, middle fixing hole	RH windshield side upper finisher, fixing hole	1827 (71.92)
B	LH windshield side upper finisher, fixing hole	RH windshield side upper finisher, fixing hole	1431.5 (56.35)

Side view dimensions

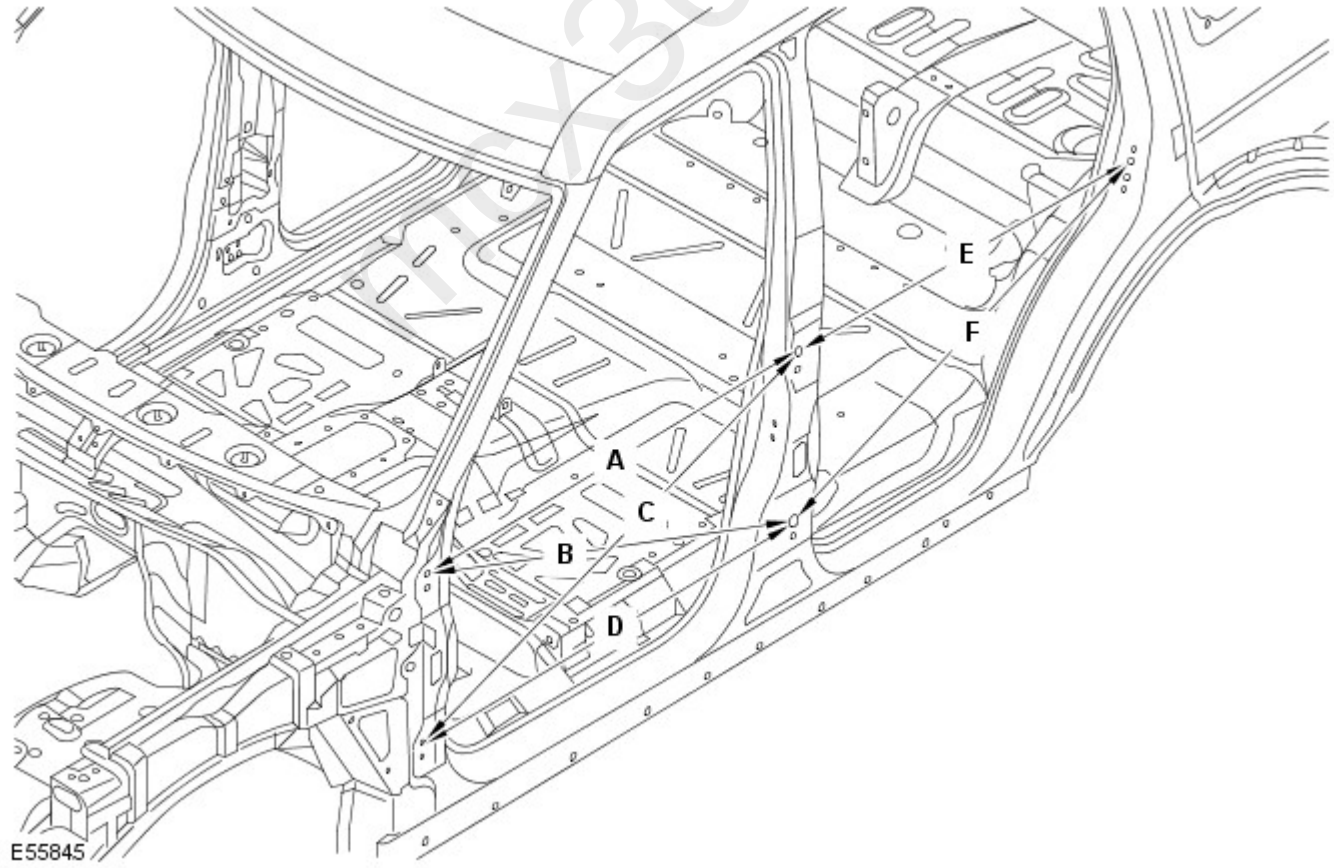

Item	From	To	Length
A	Front door top hinge, top fixing hole	Rear door top hinge, top fixing hole	1078.9 (42.47)
B	Front door top hinge, top fixing hole	Rear door bottom hinge, top fixing hole	1138.3 (44.81)
C	Front door bottom hinge, top fixing hole	Rear door top hinge, top fixing hole	1174.4 (46.23)

Item	From	To	Length
D	Front door bottom hinge, top fixing hole	Rear door bottom hinge, top fixing hole	1078.9 (42.47)
E	Rear door top hinge, top fixing hole	D pillar striker fixing hole	983.5 (38.72)
F	Rear door bottom hinge, top fixing hole	D pillar striker fixing hole	1069.9 (42.12)

Internal dimensions

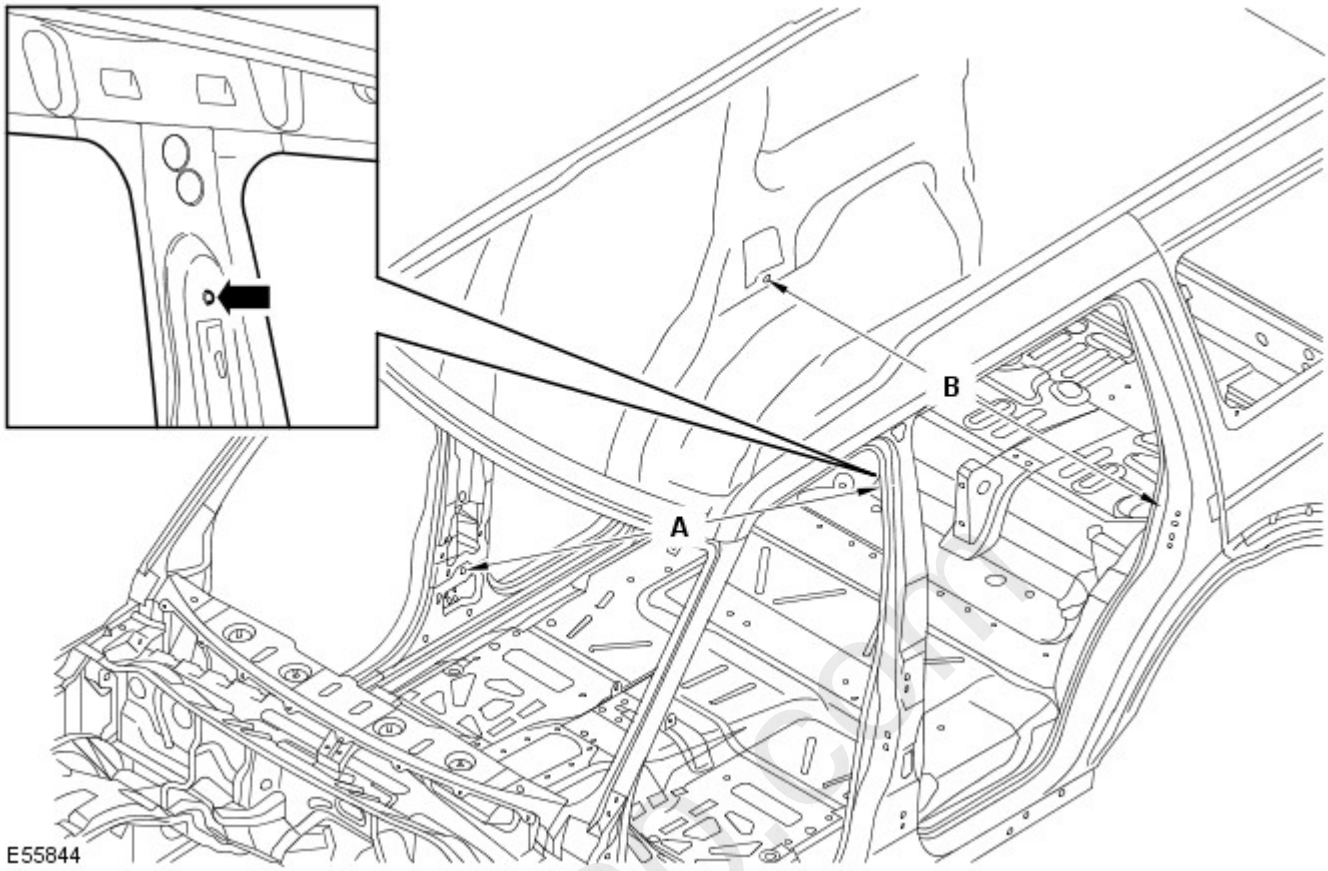

Item	From	To	Length
A	LH safety belt anchorage, top fixing	RH safety belt retractor, lower fixing	1743.6 (68.64)
B	RH inner rear wheelarch, lower safety belt retractor fixing	LH inner rear wheelarch, lower safety belt retractor fixing	1518.2 (59.77)

Rear view dimensions

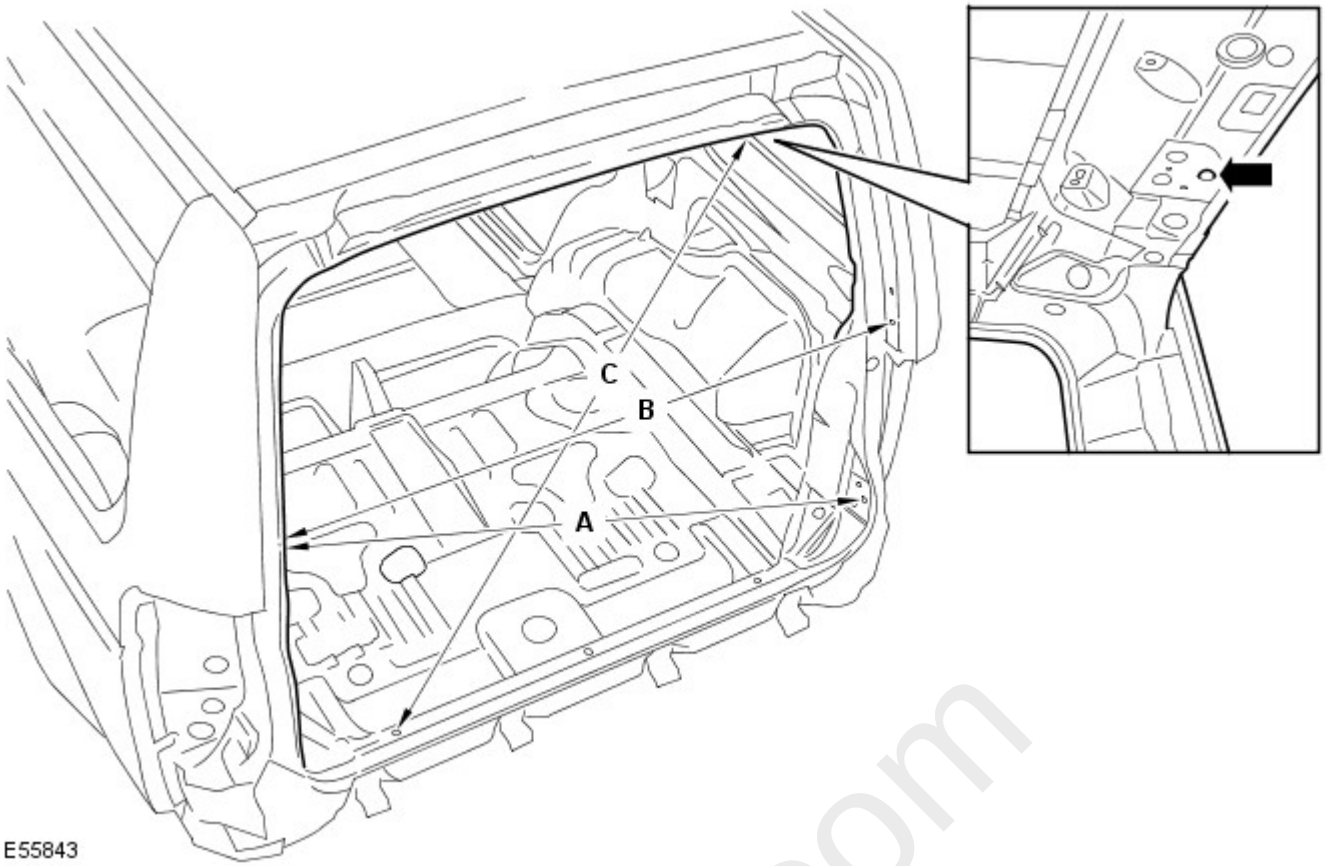

Item	From	To	Length
A	Liftgate, RH alignment fixing	Tailgate, LH striker fixing	1222.1 (48.11)
B	Liftgate, RH alignment fixing	Liftgate, LH alignment fixing	1186.6 (46.71)
C	Tailgate, LH hinge cover, fixing hole	Rear header, RH location hole	1184.3 (46.62)

Underbody Dimensional Information

Front integral body frame dimensions

mcx30.com

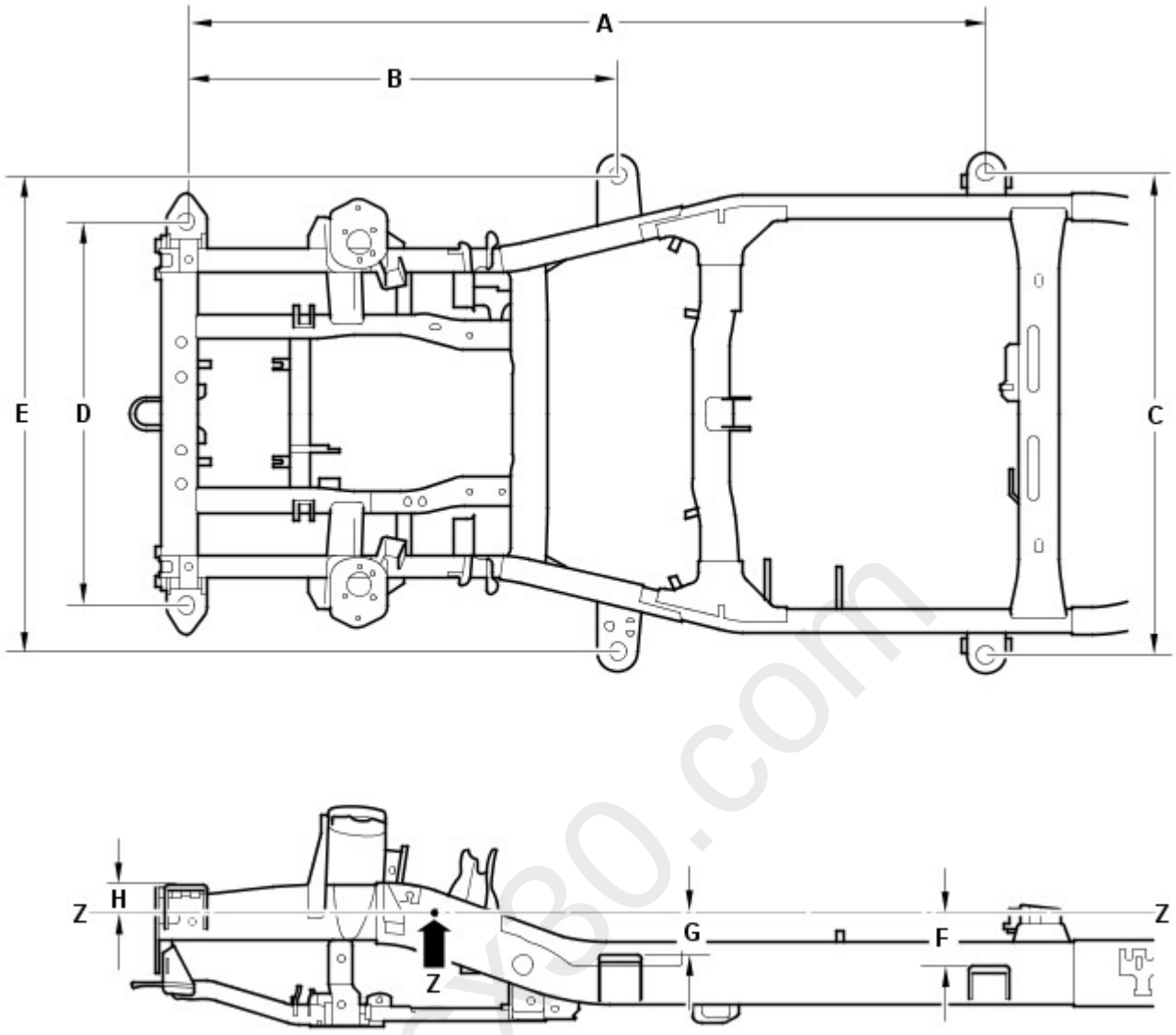

E55836

Item	From	To	Length
A	Body Mount 1 (front)	Body Mount 3	2113 (83.12)
B	Body Mount 1 (front)	Body Mount 2	1139 (44.84)
C	Body Mount 3 (LH)	Body Mount 3 (RH)	1275 (50.196)
D	Body Mount 1 (LH front)	Body Mount 1 (RH front)	1015 (39.96)
E	Body Mount 2 (LH)	Body Mount 2 (RH)	1258 (49.53)
F	Datum Line (Z)	Body Mount 3	136.5 (5.374)
G	Datum Line (Z)	Body Mount 2	105.5 (4.15)
H	Datum Line (Z)	Body Mount 1	78.8 (3.102)

Front integral body frame dimensions

mcx30.com

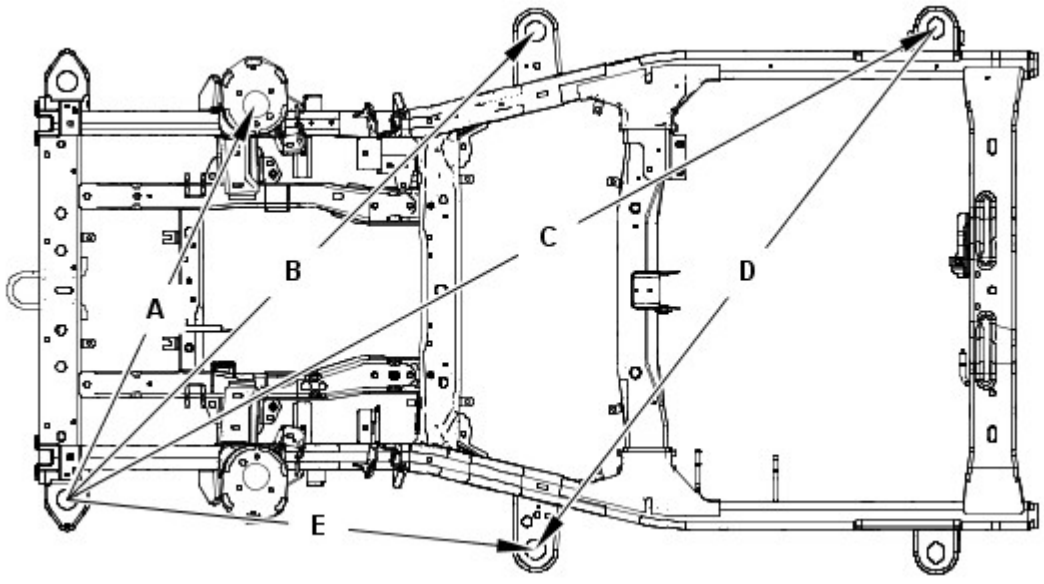

Item	From	To	Length
A	Body Mount 1 (LH front)	Damper Mounting (RH)	1063.1 (41.85)
B	Body Mount 1 (LH front)	Body Mount 2 (RH)	1609 (63.34)
C	Body Mount 1 (LH front)	Body Mount 3 (RH)	24.3.3 (94.61)
D	Body Mount 2 (LH front)	Body Mount 3 (RH)	1597.7 (62.90)
E	Body Mount 1 (LH front)	Body Mount 2 (LH)	1139 (44.84)

Front integral body frame dimensions

mcx30.com

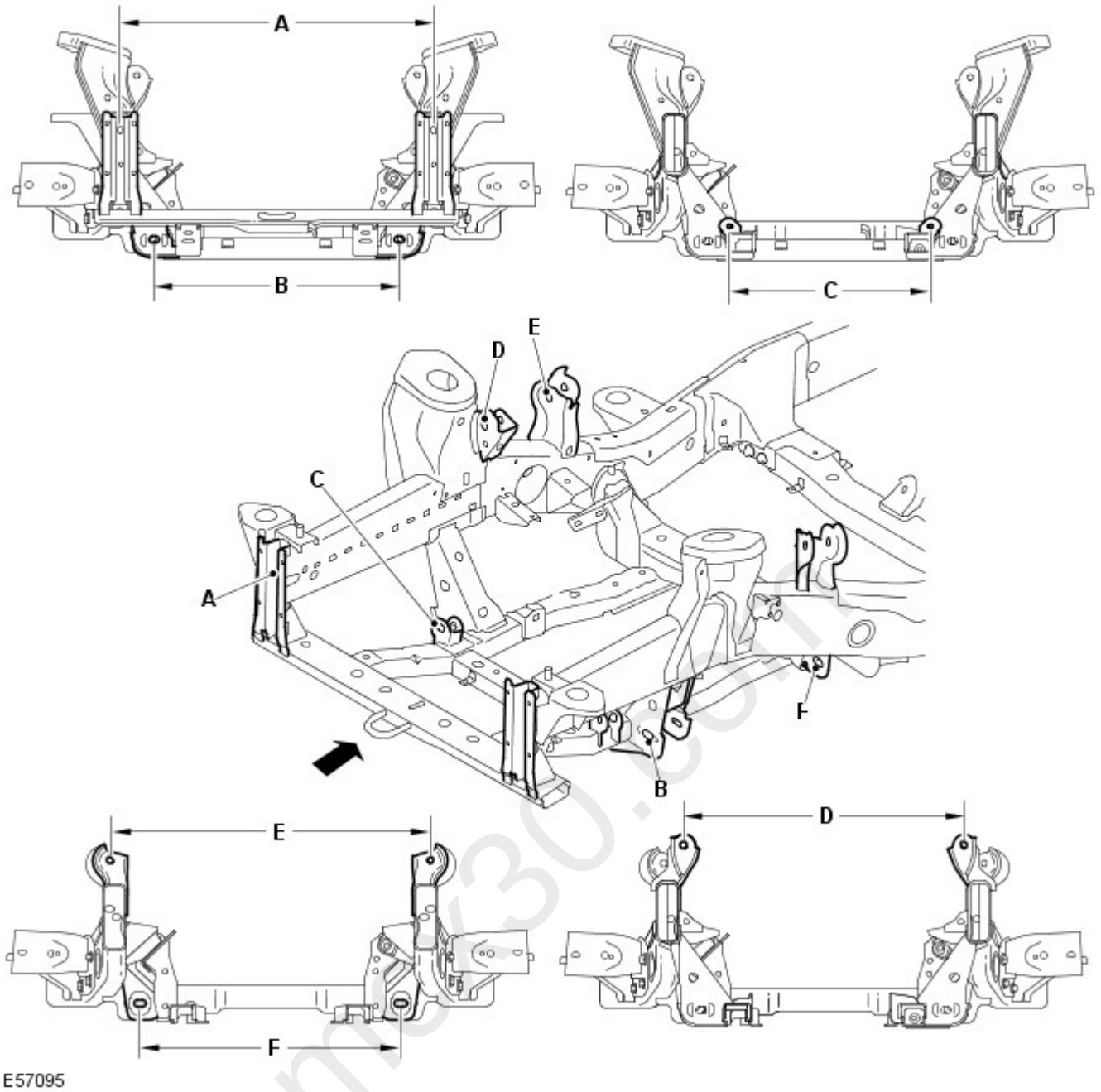

Item	From	To	Length
A	Front Bumper Mount (L/H)	Front Bumper Mount (R/H)	810 (31.8)
B	Lower Arm (L/H front)	Lower Arm (R/H front)	635.7 (25.02)
C	Steering Gear (L/H)	Steering Gear (R/H)	520 (20.4)
D	Upper Arm (L/H front)	Upper Arm R/H front)	748.7 (29.47)
E	Upper Arm (L/H rear)	Upper Arm (R/H rear)	836.8 (32.9)
F	Lower Arm ((L/H rear)	Lower Arm ((L/H rear)	678.6 (26.71)

Front integral body frame dimensions

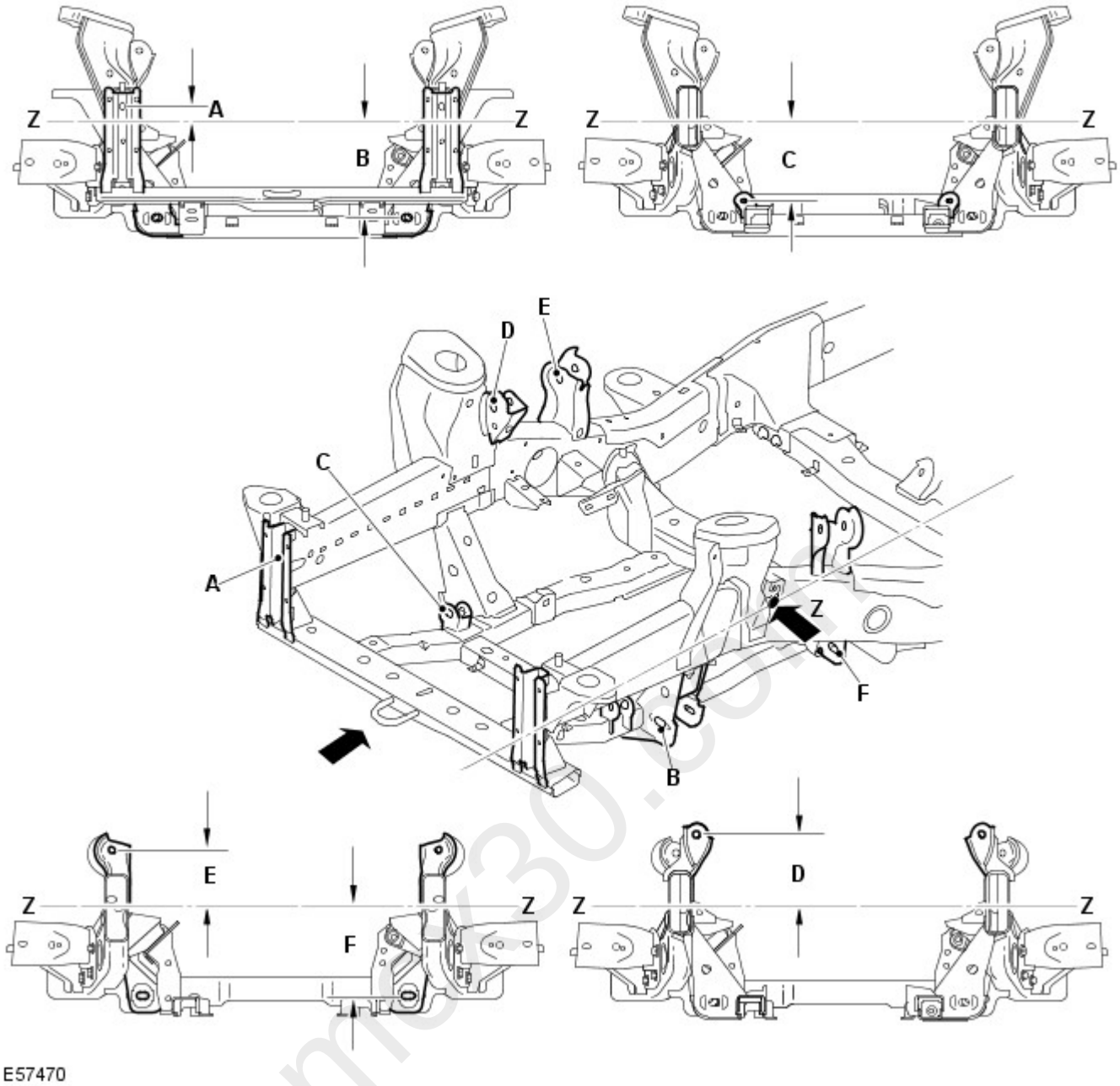

Item	From	To	Length
A	Datum Line (Z)	Front Bumper Mount	37.81 (1.488)
B	Datum Line (Z)	Lower Arm	249.22 (9.811)
C	Datum Line (Z)	Steering Gear	201.84 (7.946)
D	Datum Line (Z)	Upper Arm front	170.09 (6.696)
E	Datum Line (Z)	Upper Arm Rear	134.17 (5.282)
F	Datum Line (Z)	Lower Arm Rear	236.37 (5.282)

Rear integral body frame dimensions

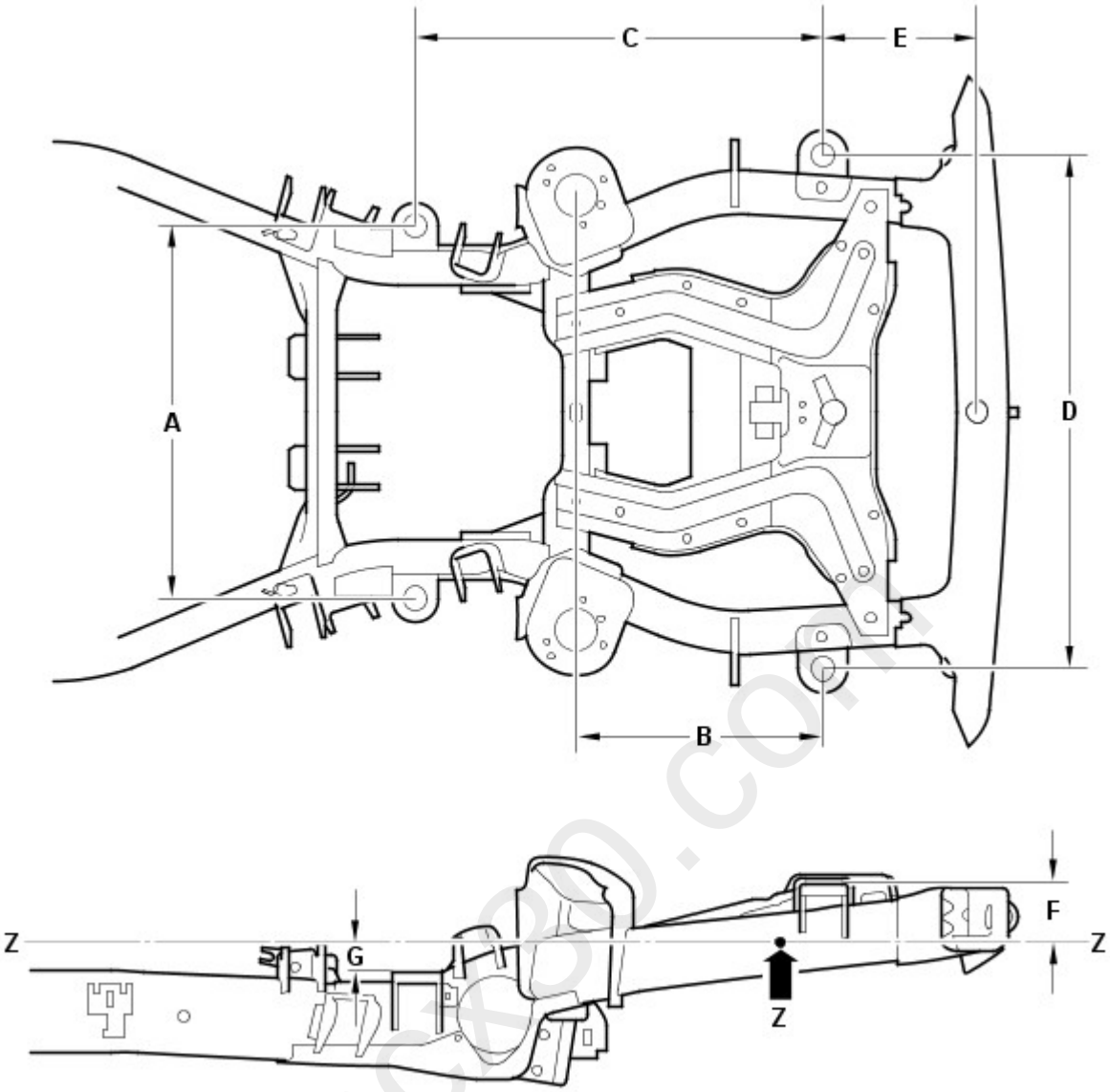

E55834

Item	From	To	Length
A	Body Mount 4 (LH)	Body Mount 4 (RH)	806 (31.732)
B	Body Mount 5 (rear)	Damper Mounting	533.5 (21.00)
C	Body Mount 5 (rear)	Body Mount 4	882.8 (34.755)
D	Body Mount 5 (LH rear)	Body Mount 5 (RH rear)	1114 (43.858)
E	Body Mount 5 (rear)	Rear Crossmember	332 (13.07)
F	Datum Line (Z)	Body Mount 5 (rear)	127.5 (5.01)
G	Datum Line (Z)	Body Mount 4	61.2 (2.40)

Rear integral body frame dimensions

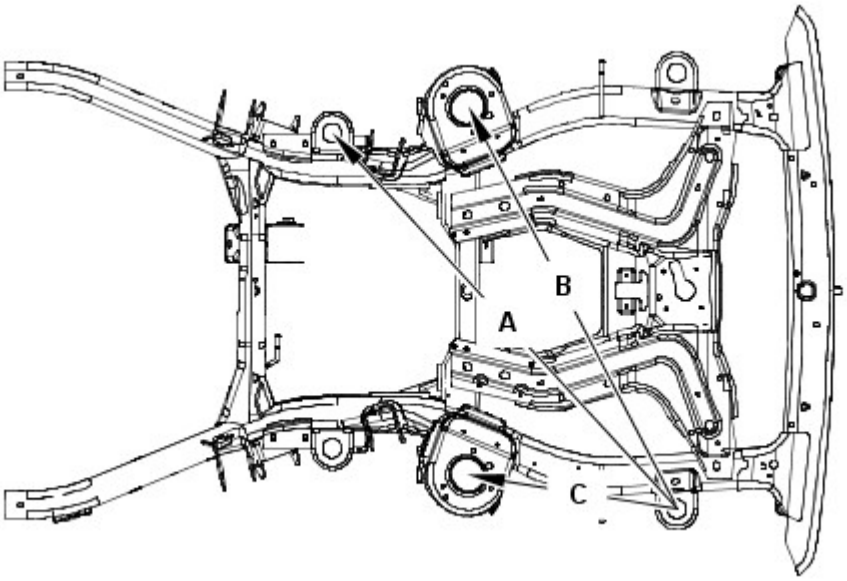

E55833

Item	From	To	Length
A	Body Mount 5 (LH rear)	Body Mount 4 (RH)	1304.2 (51.34)
B	Body Mount 5 (LH rear)	Rear Damper Mounting (RH)	1156 (45.51)
C	Body Mount 5 (LH rear)	Rear Damper Mounting (LH)	533.5 (21.00)

Rear integral body frame dimensions

mcx30.com

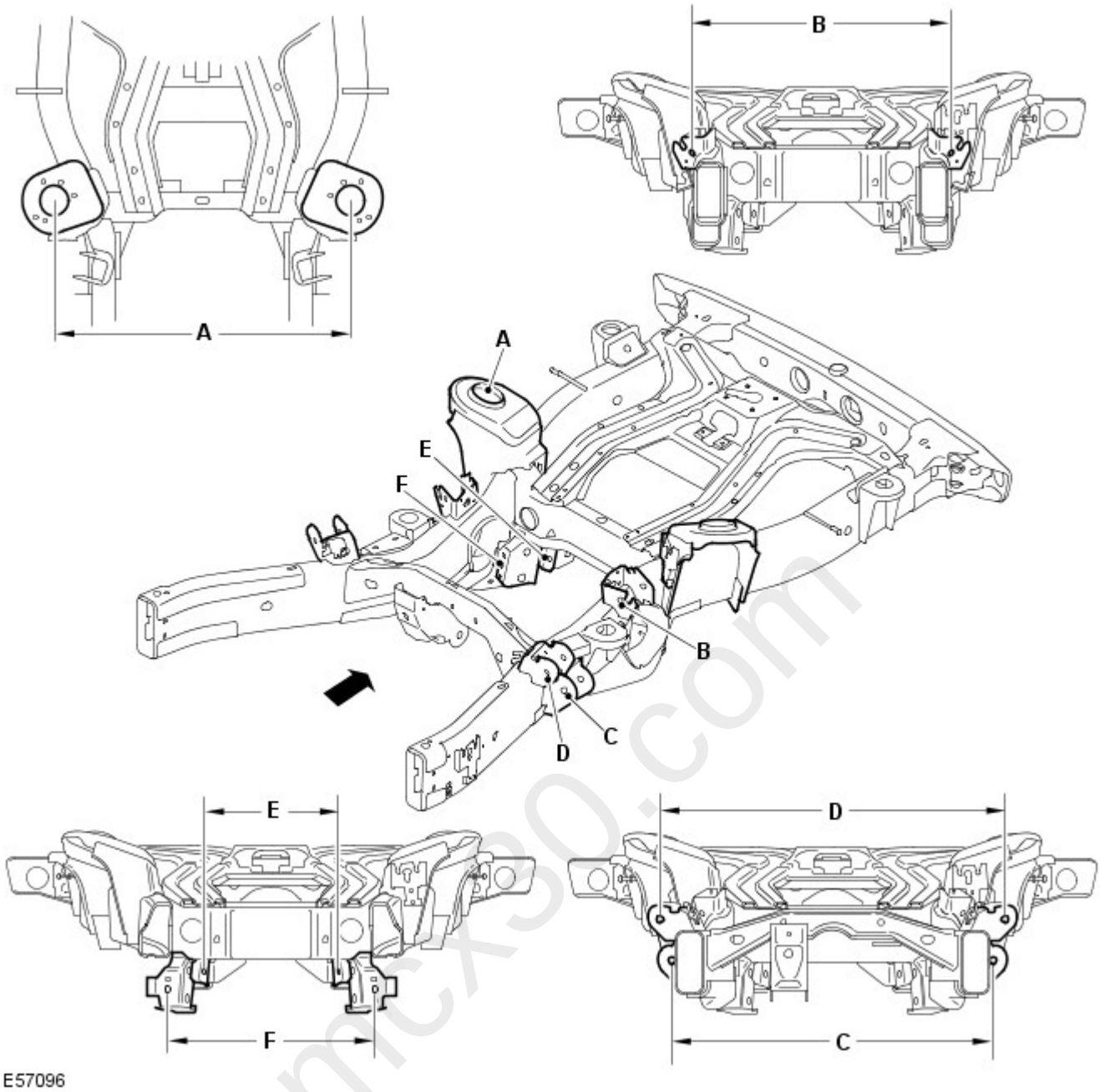

Item	From	To	Length
A	Damper (L/H)	Damper (R/H)	937.1 (36.9)
B	Upper Arm (L/H rear)	Upper Arm (R/H rear)	757.4 (29.81)
C	Lower Arm (L/H front)	Lower Arm (R/H front)	818.4 (32.2)
D	Upper Arm (L/H front)	Upper Arm (R/H front)	946.5 (37.2)
E	Toe Link (L/H)	Toe Link (R/H)	439 (17.2)
F	Lower Arm (L/H rear)	Lower Arm (R/H rear)	508.4 (20.01)

Rear integral body frame dimensions

mcx30.com

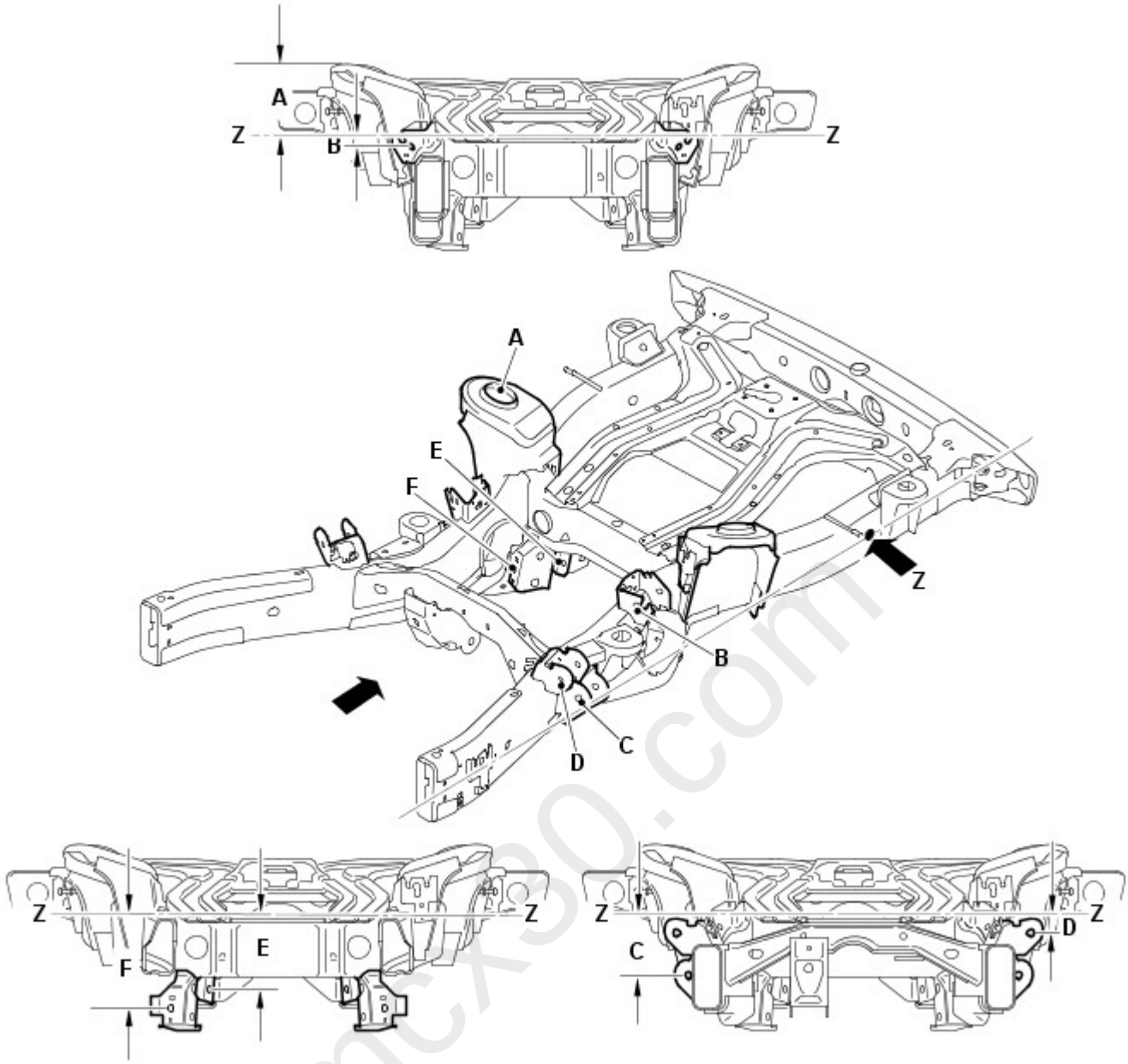

Item	From	To	Length
A	Datum Line (Z)	Damper	169.97 (6.691)
B	Datum Line (Z)	Upper Arm Rear	32.27 (1.270)
C	Datum Line (Z)	Lower Arm Front	161.04 (6.340)
D	Datum Line (Z)	Upper Arm Front	55.07 (2.168)
E	Datum Line (Z)	Toe Link	200.87 (7.908)
F	Datum Line (Z)	Lower Arm Rear	250.81 (9.874)

Gap and Profile Measurements

The following information is to be used as a guide to assist the technician in installing exterior body panels and trim items so as to achieve a correctly aligned and cosmetically acceptable vehicle.

Front view dimensions

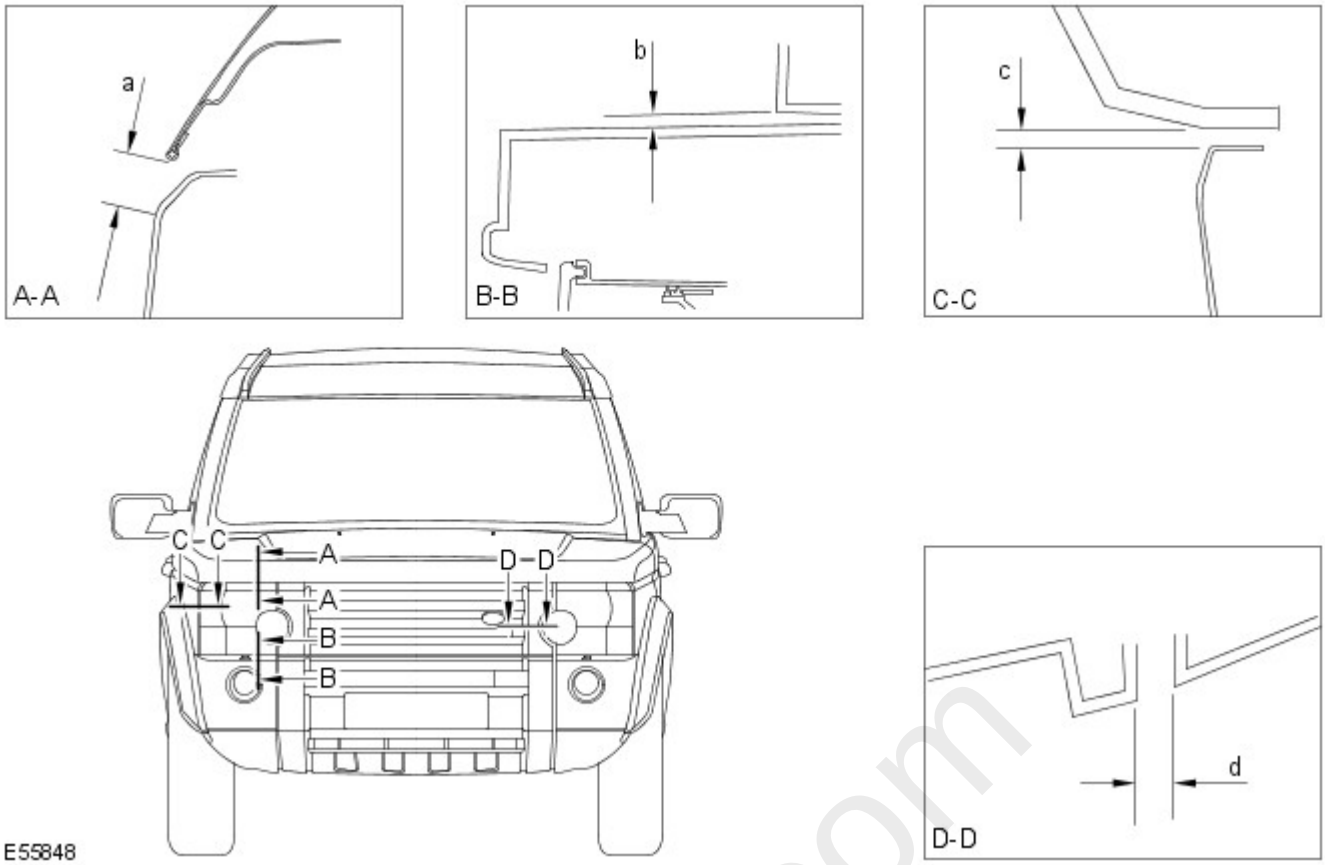

Section	Description	Gap	Profile
A-A	Headlamp to Hood	22.0 (0.866) ± 1.4 (0.055)	N/A
B-B	Headlamp to Bumper	6.0(0.236) ± 1.8 (0.070)	N/A
C-C	Headlamp to Fender	4.0(0.157) ± 1.2 (0.0472)	0.0 ± 1.2 (0.047)
D-D	Headlamp to Grille	4.0(0.157) ± 1.2 (0.0472)	0.0 ± 1.0 (0.039)

Side view dimensions

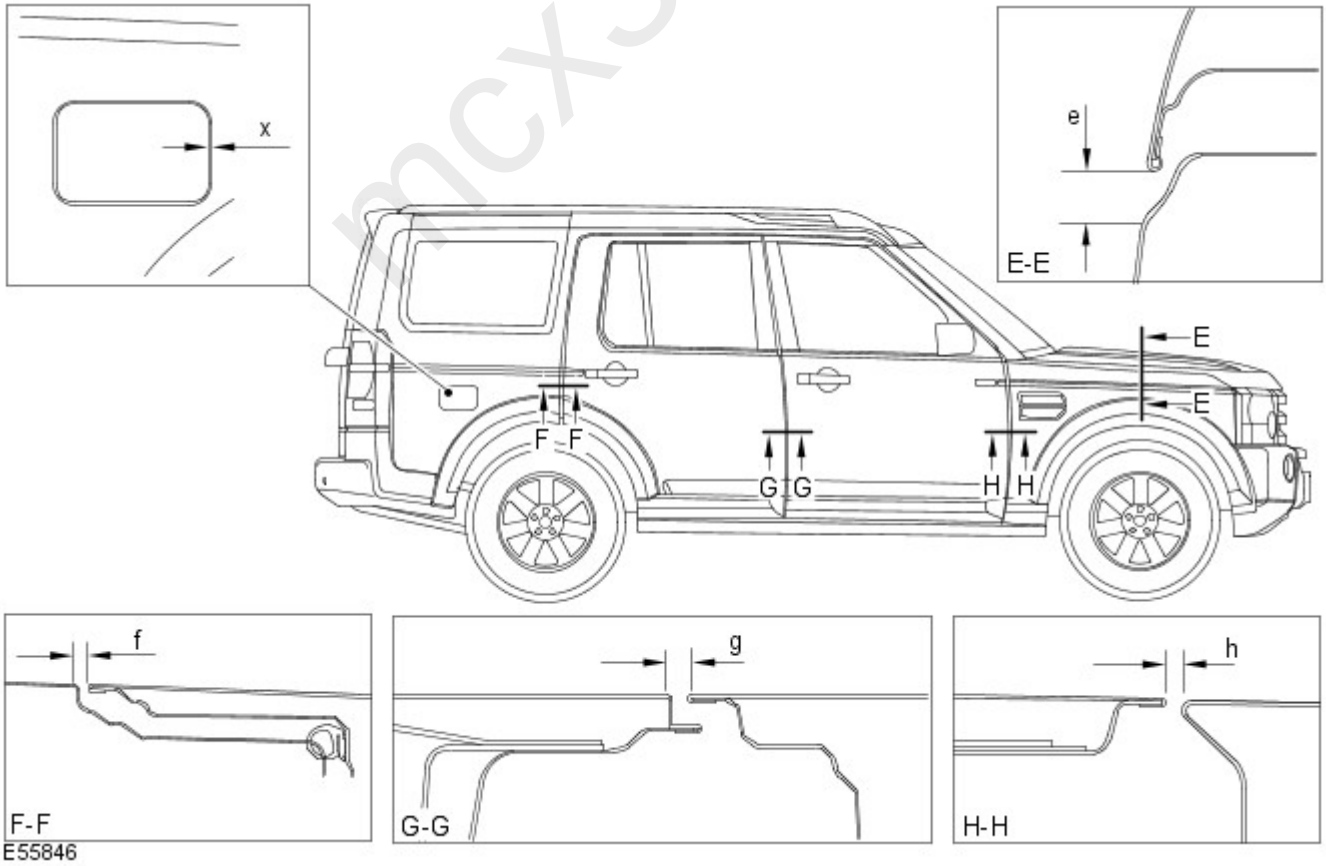

Section	Description	Gap	Profile
E-E	Hood to Fender	22.0 (0.866) ± 1.4(0.055)	+ 1.0 (0.039)

Section	Description	Gap	Profile
F-F	Rear Door to Bodyside	4.5 (0.177) ± 1.1 (0.043)	0.0 + 1.0 (0.039) - 0.0
G-G	Front Door to Rear Door	5.0 (0.196) ± 1.0 (0.039)	0.0 + 1.0 (0.039) - 0.0
H-H	Front Fender to Front Door	5.0 (0.196) ± 1.0 (0.039)	0.0 + 1.4 (0.055) - 0.0
X-X	Fuel Filler Flap to Bodyside	2.9 (0.114) ± 1.0 (0.039)	1.0 (0.039) ± 1.0 (0.039)

Rear view dimensions

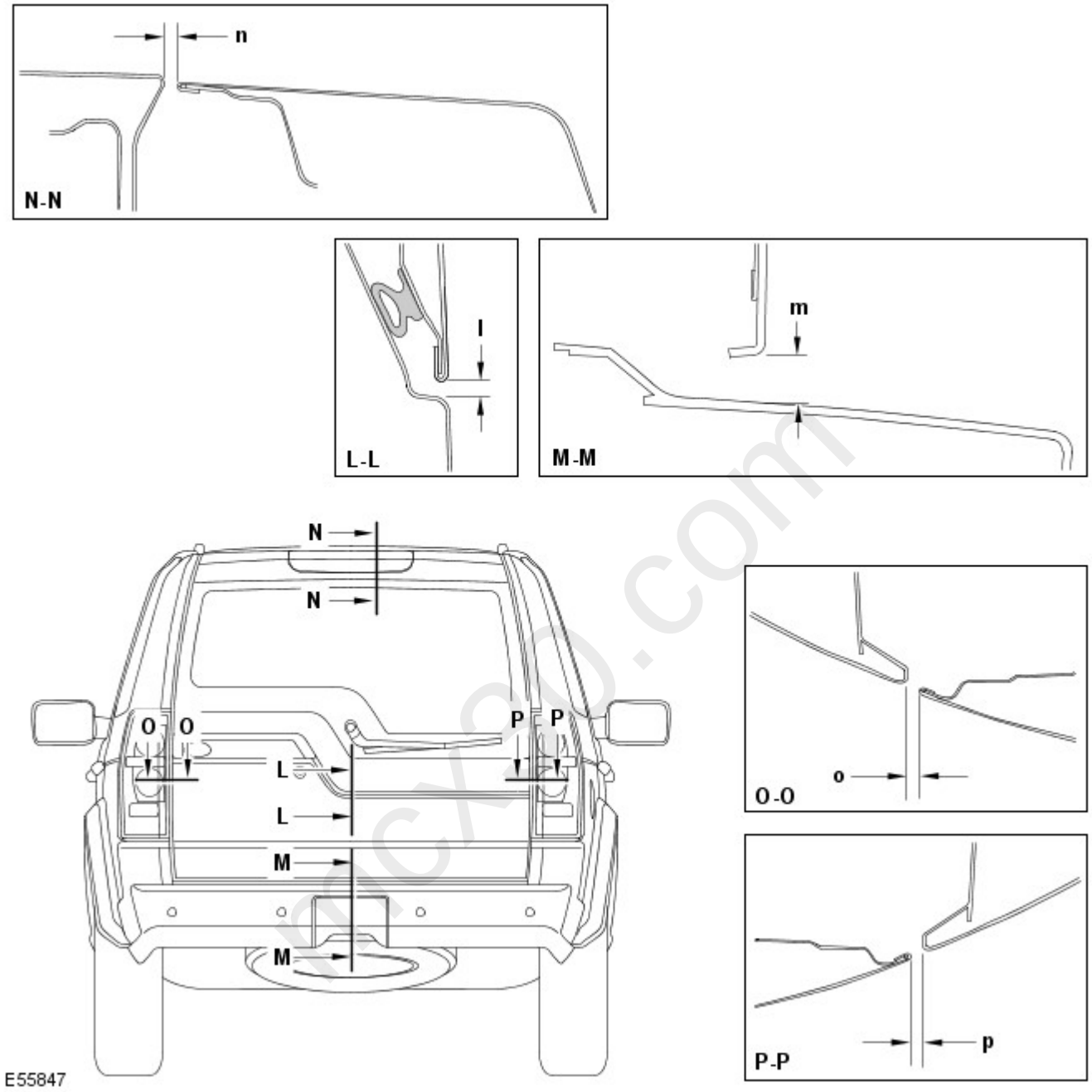

Section	Description	Gap	Profile
L-L	Liftgate to Tailgate	6.0 (0.236) ± 1.0 (0.039)	0.0 ± 1.0 (0.039)
M-M	Tailgate to Bumper	12.8 (0.503) ± 2.1 (0.0826)	N/A
N-N	Liftgate to Roof	10 (0.393) ± 1.3 (0.0511)	-2.0 (0.078) ± 1.3 (0.0511)
O-O	Tailgate to Rear Lamp	5.0 (0.196) ± 1.6 (0.062)	5.0 (0.196) ± 1.3 (0.0511)
P-P	Liftgate to Rear Lamp	5.0 (0.196) ± 1.6 (0.062)	3.0 (0.118) ± 1.9 (0.074)